LA

LUMINAIRE AUTHENTIK

DANOISE 24
LA40

USAGE INTÉRIEUR SEULEMENT / INTERIOR USE ONLY
20150318-E475067

514.662.0352 | LUMINAIREAUTHENTIK.COM
All rights reserved to Authentik Lighting / Tous les droits sont réservés à Luminaire Authentik © 2020

LUMINAIRE AUTHENTIK

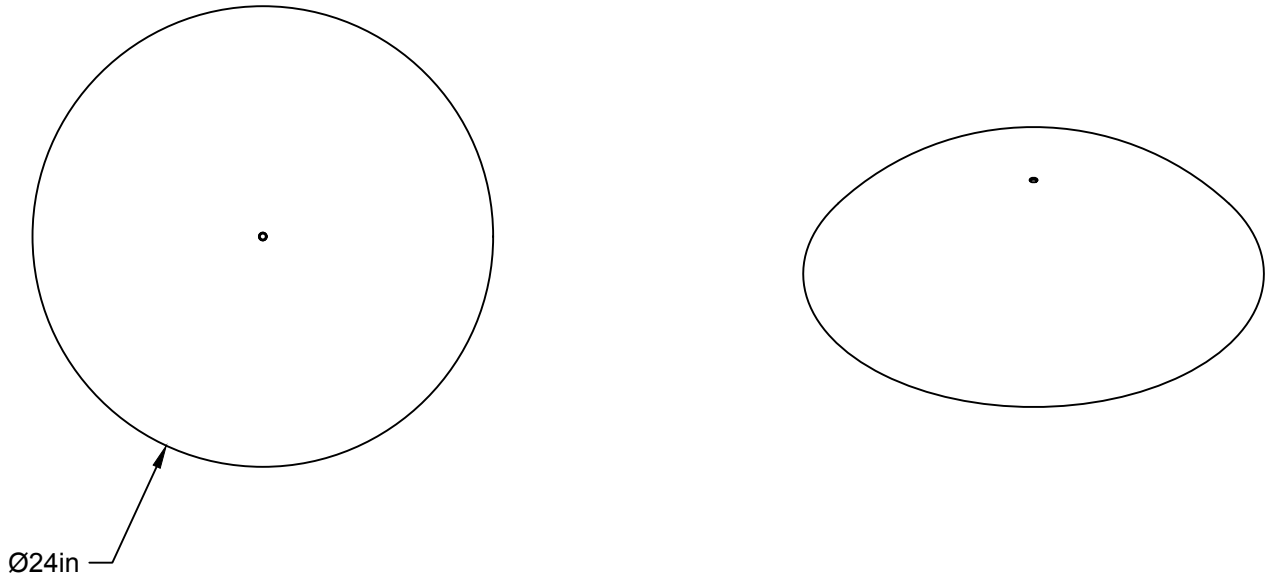

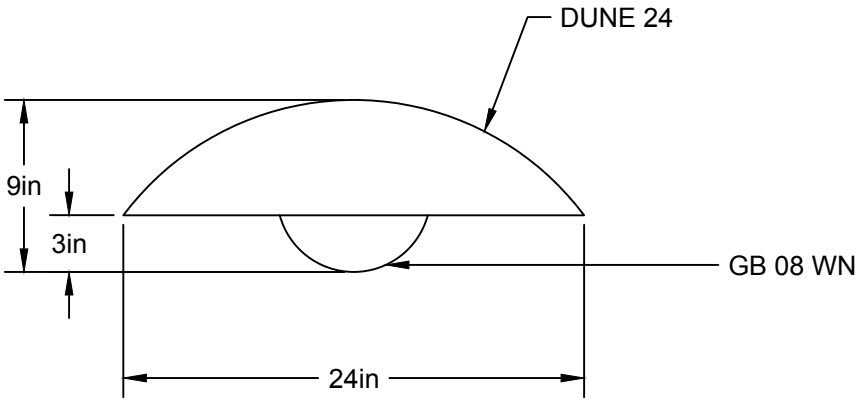

LIEN 3D:
https://a360.co/349JhF2

AMPOULE / BULB :
TALA SPHERE II - 8 WATT - 560 LUMENS - 2000K TO 2800K

INCANDESCENT / LED
1 BASE E26 SOCKET, 120 VOLTS, DIMMABLE, 100W MAX
AMPOULE INCLUSE / BULB INCLUDED*
Détail sur fiche technique / Details on spec sheet

DANOISE 24

USAGE INTÉRIEUR SEULEMENT, INDOOR USE ONLY
UL # Certificat: 20150318-E475067

514.662.0352 | LUMINAIREAUTHENTIK.COM
All rights reserved to Authentik Lighting / Tous les droits sont réservés à Luminaire Authentik © 2021

LA

LUMINAIRE AUTHENTIK

OPTIONS TIGE / ROD OPTIONS

1) Abat-jour sur base/ Shade on the base

2) Avec courte tige 7/8" With a $\frac{7}{8}$'' sleeve

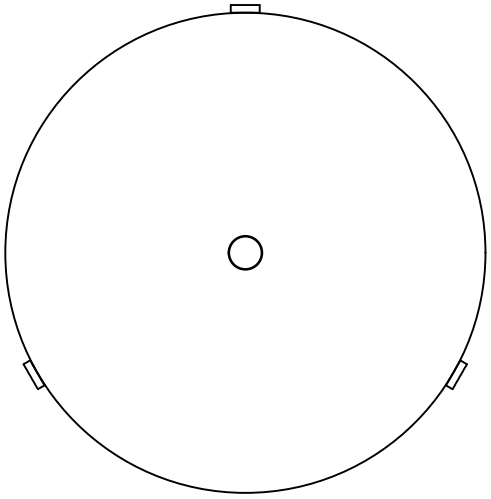

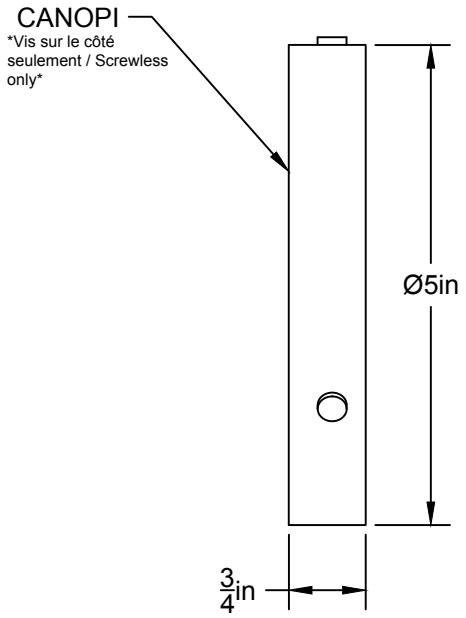

LIEN 3D:
https://a360.co/2Ub6NN9

LA40

USAGE INTÉRIEUR SEULEMENT / INTERIOR USE ONLY
20150318-E475067

514.662.0352 | LUMINAIREAUTHENTIK.COM
All rights reserved to Authentik Lighting / Tous les droits sont réservés à Luminaire Authentik © 2020

LA

LUMINAIRE AUTHENTIK

ABAT-JOURS - SHADES EXT.

[WTM] [WTL] [WGL] [BKM] [BKL] [CHM] [CNM] [ORM] [BZM] [GYL] [SLM] [NVL] [BML] [TLM] [DGL]

[CTL] [MGL] [SGL] [MGM] [VCL] [POL] [NDL] [CRL] [SAM] [WHM] [PHM] [AYL] [YLL] [OGL] [REL]

[FCM] [TMM] [CYL] [CPO] [MBL] [POM] [CYM] [WGM] [DGM] [NDM] [SGM] [OWM] [BGM]

ABAT-JOURS - SHADES INT. EN SUS ($)

[WTM] [WTL] [WGL] [BKM] [BKL] [CHM] [CNM] [ORM] [BZM] [GYL] [SLM] [NVL] [BML] [TLM] [DGL]

[CTL] [MGL] [SGL] [MGM] [VCL] [POL] [NDL] [CRL] [SAM] [WHM] [PHM] [AYL] [YLL] [OGL] [REL]

[FCM] [TMM] [CYL] [CPO] [MBL] [POM] [CYM] [WGM] [DGM] [NDM] [SGM] [OWM] [BGM] [CPM] [CPL]

[BRS]

SANS FRAIS : M ABAT-J / SAME AS SHADE

BOULE DE VERRE - GLASS BALL (SI APPLICABLE)

[GB.O] [GB.C] [GB.M] [GB.K] [GB.P] [GB.U] [GB.V] [GB.T]

FINIS - TEXTURE

[LUSTRE] [GIVRE] [ANANAS] [SWIRL] [ANANAS GIVRE] [SWIRL GIVRE]

QUINCAILLERIE - HARDWARE (SI APPLICABLE)

[BRR]

[NIR]

*SEULEMENT LA00 ONLY

M ABAT-J / SAME AS SHADE

M TIGE / SAME AS ROD

PIVOT - SWIVEL (SI APPLICABLE)

[BRR]

[NIR]

[BKM]

TIGE - ROD (SI APPLICABLE)

OPTION TIGE VERTICALE - VERTICAL ROD OPTION 4'', 8'', 12'', 18''($), 24''($), 36''($)

[WTM]

[WTL]

[WGL]

[BKM]

[BKL]

[CHM]

[CNM]

[ORM]

[BZM]

[GYL]

[SLM]

[NVL]

[BML]

[TLM]

[DGL]

[CTL]

[MGL]

[SGL]

[MGM]

[VCL]

[POL]

[NDL]

[CRL]

[SAM]

[WHM]

[PHM]

[AYL]

[YLL]

[OGL]

[REL]

[FCM]

[TMM]

[CYL]

[CPO]

[MBL]

[POM]

[CYM]

[WGM]

[DGM]

[NDM]

[SGM]

[OWM]

[BGM]

[BRR] $

FIL - WIRE (SI APPLICABLE)

[TSL]

[TWG]

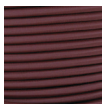
[TFC]

[TCT]

[TCH]

[TCP]

[TBW]

[TOR]

[TLL]

[TWT]

[TBK]

[TCR]

[TND]

[TAM]

CANOPY - FINIS

[WTM]

M ABAT-J / SAME AS SHADE

M TIGE / SAME AS ROD

[BRR] $

CANOPY - STYLES

[03]

[01]

[AK]

*SEULEMENT AK STYLE ONLY

[04] $

TERRAZZO

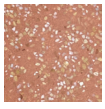
[B.PHM]

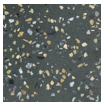
[B.CTM]

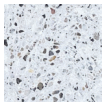
[B.OYS]

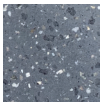
[.BKM]

[B.SAM]

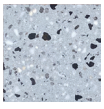
[.GRY]

TABLEAU DE RÉFÉRENCE

CODE	RÉFÉRENCE/ REFERENCE	BENJAMIN MOORE REF.	RAL REF.
[WTM]	BLANC MAT - MATT WHITE	CC-10	PC1211
[WTL]	BLANC LUSTRÉ - GLOSSY WHITE	CC-10	PSS-5690
[WGL]	GLACIER LUSTRÉ - GLOSSY WHITE GREY	2131-70	7035
[BKM]	NOIR MAT - MATT BLACK	2120-10	ESS-4441
[BKL]	NOIR LUSTRÉ - GLOSSY BLACK	2120-10	USS-2603
[CHM]	CHARCOAL MAT - MATT CHARCOAL	2124-10	UMB-6578
[CNM]	CHAMPAGNE MAT - MATT CHAMPAGNE	CC-574	PTB-5604
[ORM]	OR MAT - MATT GOLD	HC-17	EMS-0940
[BZM]	BRONZE MAT- MATT BRONZE	HC-76	PMB-10019
[GYL]	GRIS LUSTRÉ - GLOSSY GREY	2127-40	7000
[SLM]	ARDOISE MAT - MATT SLATE	HC-155	PTB-6882
[NVL]	MARINE LUSTRÉ - GLOSSY NAVY	CC-932	5011
[BML]	BLEU MINUIT LUSTRÉ - GLOSSY MIDNIGHT BLUE	CC-842	5001
[TLM]	BLEU SARCELLE MAT - MATT TEAL BLUE	2053-20	PSB-6776
[DGL]	VERT FONCÉ LUSTRÉ - GLOSSY DARK GREEN	2050-20	6004
[CTL]	CACTUS LUSTRÉ - GLOSSY CACTUS	HC-135	PSB-4632
[MGL]	VERT MENTHE LUSTRÉ - GLOSSY MINT GREEN	2035-50	PSB-6473
[SGL]	VERT SUPÉRIEUR LUSTRÉ - GLOSSY SUPERIOR GREEN	HC-137	PSB-5728
[MGM]	VERT MENTHE MAT - MATT MINT GREEN	HC-125	PSB-4407
[VCL]	VERT CLASSIQUE LUSTRÉ - GLOSSY CLASSIC GREEN	2038-10	PSB-4075
[POL]	PORCELAINE LUSTRÉ - GLOSSY PORCELAIN	2114-40	USS-6790
[NDL]	VIEUX ROSE LUSTRÉ - GLOSSY NUDE	CC-350	PGB-1992
[CRL]	CRÈME LUSTRÉ - GLOSSY CREAM	CC-50	9001
[SAM]	SABLE MAT - MATT SAND	CC-490	PSB-6872
[WHM]	BLÉ MAT - MATT WHEAT	HC-2	PSB-6996
[PHM]	PÊCHE MAT - MATT PEACH	CC-186	PSB-6817
[AYL]	JAUNE ANTIQUE LUSTRÉ - GLOSSY ANTIQUE YELLOW	HC-54	PSS-3019
[YYL]	JAUNE LUSTRÉ - GOLSSY YELLOW	2023-30	1018
[OGL]	ORANGE LUSTRÉ - GLOSSY ORANGE	2009-10	2002
[REL]	ROUGE LUSTRÉ - GLOSSY RED	2087-10	USS-6790
[FCM]	FLAT CURRENT MAT - MATT FLAT CURRENT	PM-17	PSB-8106
[TMM]	TRIP MAUVE MAT - MATT PURPLE TRIP	CC-2	PSB-6645
[CYL]	CANYON LUSTRÉ - GLOSSY CANYON	2174-10	8004
[CPO]	CUIVRE OPAQUE COPPER		PMB-4934
[MBL]	MARRON BRUN LUSTRÉ - GLOSSY BROW COPPER	2113-10	PMB-1387
[POM]	PORELAINE MAT - MATT PORCELAIN	2113-50	USB-10218
[CYM]	CANYON MAT - MATT CANYON	2174-10	PSB-10219
[WGM]	GLACIER MAT - MATT WHITE GREY	HC-170	PSB-6634
[DGM]	VERT FONCÉ MAT - MATT DARK GREEN	2054-10	PSB-10220
[CPM]	CUIVRE MAT - MATT COPPER	CC-96	UPB-4650
[CPL]	CUIRE LUSTRÉ - GLOSSY COPPER	2167-10	PPS-5162
[SGM]	GRIS DOUX MAT - SOFT MATT GREY	HC-165	PSB-6634
[OWM]	BLANC CASSÉ MAT - MATT OFF WHITE	OC-37	
[BGM]	BEIGE MAT - BEIGE MATT	OC-15	

[BRR]	LAITON BRUT - UNFINISHED BRASS
[NIR]	NICKEL BRUT - UNFINISHED NICKE

[GB.O]	OPALE - OPALE
[GB.C]	CLAIR - CLEAR
[GB.M]	AMBRÉ - AMBER
[GB.K]	FUMÉ - SMOKE
[GB.P]	ROSE - PINK
[GB.U]	SAUMON - SALMON
[GB.V]	VERT - GREEN
[GB.T]	TURQUOISE - TURQUOISE

[TSL]	TISSU.ARDOISE - SLATE
[TWG]	TISSU.GLACIER - WHITE GREY
[TFC]	TISSU.FLAT CURRENT
[TCT]	TISSU.CACTUS
[TCH]	TISSU.CHARCOAL
[TCP]	TISSU.CUIVRE - COPPER
[TBW]	TISSU.NOIR ET BLANC - BLACK AND WHITE
[TOR]	TISSU.OR - GOLD
[TTL]	TISSU.SARCELLE - TEAL
[TWT]	TISSU.BLANC - WHITE
[TBK]	TISSU.NOIR - BLACK
[TCR]	TISSU.CRÈME - CREAM
[TAM]	TISSU.ARMÉ - ARMY
[TND]	TISSU.NUDE